14.1 CTV CHASSIS

	L104	L107	F101	F102	F104	F105	F106	R535	R536	IC101
BG A2 ONLY	8.2u	-	Q1966M	-	TP85.5MB	-	-	OR	-	TDA8844X
BG A2+NICAM	8.2u	-	Q1966M	-	TP85.5MNA	-	-	OR	-	TDA8844X
I	8.2u	-	J1980M	-	TP86.0MB	40.4MHZ	-	OR	-	TDA8844X
DK	-	5.6u	K2966M	-	TP7002B	-	40.4MHZ	OR	-	TDA8844X
L/L'	OR	-	K3953M	K9456M	-	-	-	OR	OR	TDA8874

	C141	IC101
PAL 90'	-	TDA8841
PAL 110'	-	TDA8843
PAL SECAM 90'	220n 50V	TDA8842
PAL SECAM 110'	220n 50V	TDA8844

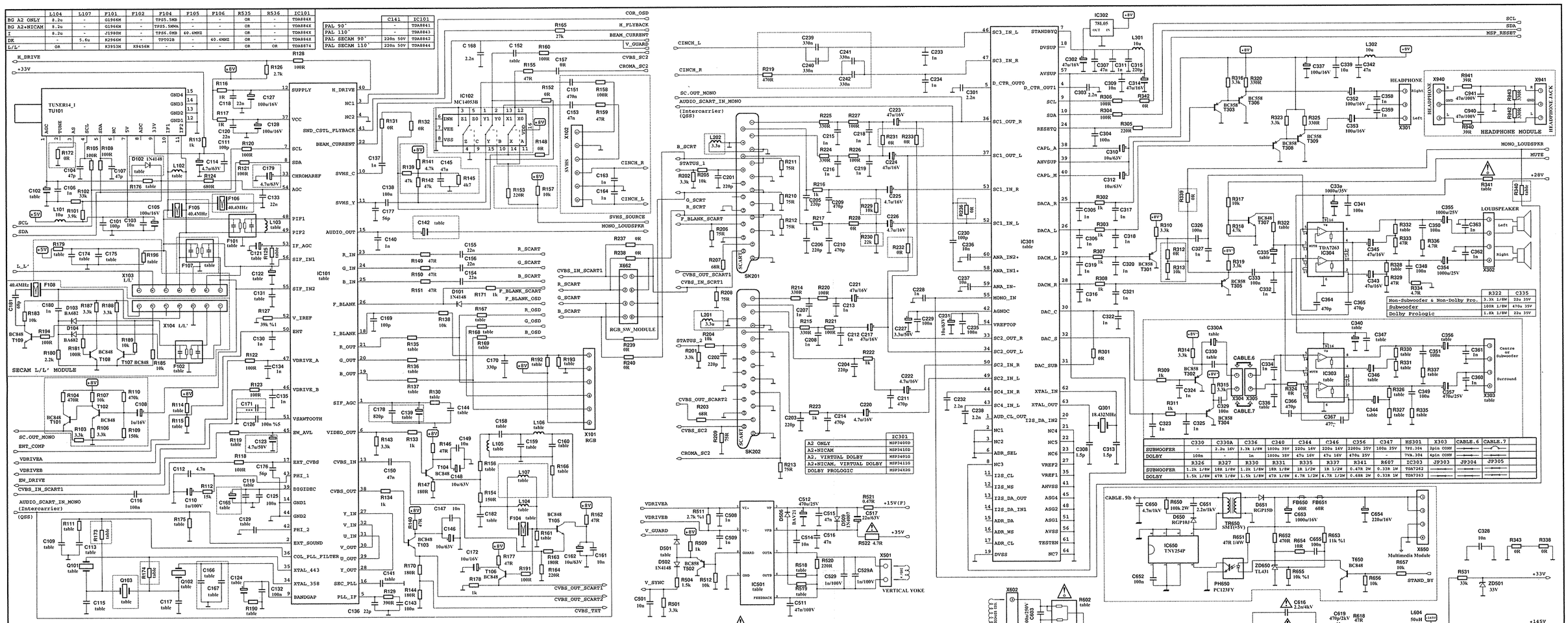
TUNER14_I
TU101
IC101
IC102
MC14053B
SECAM L/L' MODULE
SK201
SK202
X101
RGB
RGB_SW_MODULE
X662
IC301
IC302
IC303
TDA7263
HEADPHONE MODULE
LOUDSPEAKER
CABLE.6
CABLE.7
CABLE.9a
CABLE.9b
IC650
TNY254P
PH650
PC123FY
TR650
SMT(+5V)
X650
Multimedia Module
STAND_BY
Q301
18.432MHz
IC501
VERTICAL YOKE
X501
DEGAUSS
X602
X601
AC INPUT
MAINS
L601 table
JP605
PFC 2mH
L602
IC601
MC44608
TR601 table
TR602 table
HORIZONTAL YOKE
X502
CRT
FOCUS
SCREEN
EHT
CRT MODULE
X703 table
CRT SOKET
X702
CRT
G2
AQUA
SMPS
HS301 table
HS501
HS901
HS101
PH601
PC123FY
ZD602
TL431C
ZD603
12V
KEYBOARD MODULE
KEYBOARD
PHOTO_SENSOR
IC901
VOL+
VOL-
PR+
PR-
STANDBY
X901
6-WAY PLUG
X920
VIDEO
X921
CINCH R
X922
CINCH L
X923
X924
SVHS_SOKET
SVHS MODULE
29" ONLY
29" FLAT ONLY
X401
IC402
S24C08
SERVICE PLUG
IC401
SAA5563
X403
X404
X405
X406
X661
Q401
12MHz
X601
X603
X604
X605
X606
X607
X608
X609
X610
X611
X612
X613
X614
X615
X616
X617
X618
X619
X620
X621
X622
X623
X624
X625
X626
X627
X628
X629
X630
X631
X632
X633
X634
X635
X636
X637
X638
X639
X640
X641
X642